TADANO

GR-130NL (I)
GR-130N (I)

6-section boom
2-section power tilt jib
X-type/H-type outrigger

CREVO mini G3α

SPECIFICATIONS

CRANE

CRANE CAPACITY	5.3-m boom	13,000 kg x 1.5 m (8 parts of line) ···GR-130NL 4,900 kg x 4.0 m (4 parts of line) ···GR-130N
	9.0-m boom	6,000 kg x 4.0 m (4 parts of line) ···GR-130NL 4,900 kg x 4.5 m (4 parts of line) ···GR-130N
	12.7-m boom	6,000 kg x 4.0 m (4 parts of line) ···GR-130NL 4,900 kg x 4.5 m (4 parts of line) ···GR-130N
	16.4-m boom	5,000 kg x 4.5 m (4 parts of line) ···GR-130NL 4,900 kg x 4.5 m (4 parts of line) ···GR-130N
	20.1-m boom	4,700 kg x 4.0 m (4 parts of line)
	23.8-m boom	3,200 kg x 5.5 m (4 parts of line)
	3.6-m jib	1,600 kg x 80° (1 part of line)
	5.5-m jib	1,000 kg x 70° (1 part of line)
	Single top	1,800kg (1 part of line)
MAXIMUM LIFTING HEIGHT	Boom	24.5 m
	Jib	30.0 m
MAXIMUM LOAD RADIUS	Boom	22.3 m
	Jib	23.3 m
BOOM LENGTH		5.3 m-23.8 m
BOOM TELESCOPING LENGTH		18.5 m
BOOM EXTENSION SPEED		18.5 m/52 s
JIB LENGTH		3.6 m, 5.5 m
WINDING SPEED (Rope speed)	Main winch	125 m/min (5 layers)
	Auxiliary winch	110 m/min (3 layers)
HOOK WINDING SPEED	Main winch	31.3 m/min (4 parts of line)
	Auxiliary winch	110 m/min (1 part of line)
UNWINDING SPEED (Rope speed) [Reference]	Main winch	Standard: 110 m/min (5 layers), high speed: 155 m/min (5 layers)
	Auxiliary winch	Standard: 100 m/min (3 layers), high speed: 145 m/min (3 layers)
BOOM ELEVATION ANGLE		-3°-82°
BOOM ELEVATION SPEED		-3°-82°/29 s
SLEWING ANGLE		360° continuous
SLEWING SPEED		2.4 min^{-1} {rpm}
WIRE ROPE	Main winch	Dia. 11.2 mm × length 137 m rotation-resistant wire rope
	Auxiliary winch	Dia. 11.2 mm × length 70 m rotation-resistant wire rope
BOOM		Box-construction, 6-section, hydraulic telescoping type (2nd and 3rd sections synchronized, 4th, 5th and 6th sections synchronized)
BOOM TELESCOPING SYSTEM		2 double-acting hydraulic cylinders, 3 wire rope boom telescoping systems
JIB		Stowed below boom 2-section (telescoping 2nd section) Offset 5°–60° Hydraulic stepless tilt type
SINGLE TOP		Fixed on top boom section
HOISTING SYSTEM		Driven by hydraulic motor and via bevel gear reducer, automatic brake, high-speed unwind function, 2 single winches, pressure compensated flow control valve
BOOM ELEVATING SYSTEM		1 double-acting hydraulic cylinder, pressure compensated flow control valve
SLEWING SYSTEM		Driven by hydraulic motor and via bevel gear reducer, ball bearing type, negative brake
OUTRIGGER		Fully hydraulic X-type or H-type (floats mounted integrally), slides and jacks each provided with independent operation device, extension width: maximum: 4.7 m, middle: 4.3 m, 3.5 m, 2.5 m, minimum: 1.7 m (X-type), 1.64 m (H-type)
OPERATION METHOD		Hydraulic pilot operation type
MAXIMUM LOAD OF OUTRIGGER		13.0 t (GR-130NL), 10.6 t (GR-130N)
POWER TAKE OFF		PTO wet multiplate clutch type
HYDRAULIC PUMP		Tandem variable piston pump, tandem gear pump
SAFETY DEVICES		Automatic moment limiter (AML), slewing automatic stop device, elevation slow down and stop device, over-winding cutout device, working area control device, outrigger extension width detector, boom telescoping cylinder hydraulic lock device, boom elevating cylinder hydraulic lock device, power tilt cylinder hydraulic lock device, level gauge, hydraulic safety valve, jack cylinder hydraulic lock device, hook safety latch
STANDARD EQUIPMENT		Air conditioner with dehumidifier function, hydraulic oil temperature display lamp, AM/FM radio, oil cooler, visual drum indicator Operation pedals … ISO arrangement: for telescoping and for auxiliary winch Tadano arrangement: for elevating and for telescoping Mobile communication device (HELLO-NET Owner's Site), fuel consumption monitor, eco mode
ACCESSORIES		Wood blocks (4), aluminum base blocks (4), loudspeaker

CARRIER

NAME AND MODEL		Tadano WDR-T010
ENGINE	Name	Cummins QSB4.5 (with turbocharger and air cooling)
	Model	Water-cooled, 4-cycle, 4-cyclinder, direct injection diesel engine
	Piston displacement	4.460 L
	Maximum output	121kW{165PS}/2,200min^{-1} {rpm}
	Maximum torque	588N·m{60.0kgf·m}/1,800min^{-1} {rpm}
TORQUE CONVERTER		3-element, 1-section (with automatic lock-up mechanism)
TRANSMISSION		Automatic and manual transmission, power shift type (wet multiplate clutch) 3 forward and 1 reverse speeds (with Hi/Low settings)
SPEED REDUCER		Spiral bevel gear two-stage deceleration type
DRIVING METHOD		2WD (4×2)/4WD (4×4) switchable type
FRONT AXLE		Full-floating type
REAR AXLE		Full-floating type
SUSPENSION	Front	Parallel leaf spring suspension system (with hydraulic lock cylinder)
	Rear	Parallel leaf spring suspension system (with hydraulic lock cylinder)
STEERING		Fully hydraulic power steering
BRAKE	Service brake	Hydro-pneumatic disc brake
	Parking brake	Pneumatic drive shaft spring brake
	Auxiliary brake	Exhaust valve type exhaust brake Auxiliary braking device for operations
FRAME		Welded box-shaped structure
BATTERY		Two 12 V, 100 Ah (24 V)
FUEL TANK CAPACITY		189 L
TIRES	Front	275/80 R22.5 151/148J
	Rear	275/80 R22.5 151/148J
CAB		Crew capacity: 1 person, with interior fittings, rubber mounted type, fully adjustable suspension seat (with head rest, arm rest and seat belt), adjustable handle (tilt, telescoping), intermittent front and ceiling wipers (with washers), power windows, side visor
SAFETY DEVICES		Emergency steering device, suspension lock unit, rear wheel steering lock device, engine over-run alarm, over-shift prevention device, parking brake alarm, front-left monitor TV
STANDARD EQUIPMENT		Tire chocks (4)

OPTIONS

Power retractable mirror, AML external warning lamp, road shoulder lamp, marker lamp, external voice alarm, discharge head lamp, toolbox

DIMENSIONS WHEN TRAVELING

Overall length		7,540 mm
Overall width		2,000 mm
Overall height		2,815 mm
Wheel base		2,750 mm
Track	Front	1,680 mm
	Rear	1,680 mm

TRAVELING CAPABILITY

Maximum traveling speed	49 km/h
Gradeability (tan θ)	0.58
Minimum turning radius	3.8 m (four-wheel steering mode)
	6.5 m (two-wheel steering mode)

WEIGHT

Gross vehicle weight	14,415 kg
Front axle load	7,050 kg
Rear axle load	7,365 kg

■ RATED LIFTING CAPACITIES

❶ Using outriggers

[BOOM] Unit: (t)

OUTRIGGER MAXIMUM EXTENSION (4.7 m) - 360° -						
Boom length / Load radius	5.3 m	9.0 m	12.7 m	16.4 m	20.1 m	23.8 m
1.0 m	13.0 (4.9)	6.0 (4.9)				
1.5 m	13.0 (4.9)	6.0 (4.9)	6.0 (4.9)			
2.0 m	12.0 (4.9)	6.0 (4.9)	6.0 (4.9)	5.0 (4.9)		
2.5 m	10.0 (4.9)	6.0 (4.9)	6.0 (4.9)	5.0 (4.9)	4.7	
3.0 m	8.2 (4.9)	6.0 (4.9)	6.0 (4.9)	5.0 (4.9)	4.7	
3.5 m	7.0 (4.9)	6.0 (4.9)	6.0 (4.9)	5.0 (4.9)	4.7	3.2
4.0 m	6.1 (4.9)	6.0 (4.9)	6.0 (4.9)	5.0 (4.9)	4.7	3.2
4.5 m		5.5 (4.9)	5.45(4.9)	5.0 (4.9)	4.5	3.2
5.0 m		4.85	4.8	4.6	4.05	3.2
5.5 m		4.3	4.3	4.2	3.7	3.2
6.0 m		3.85	3.85	3.8	3.4	3.0
7.0 m		3.15	3.1	3.3	2.9	2.6
8.0 m		2.75 (7.7 m)	2.6	2.75	2.5	2.25
9.0 m			2.1	2.35	2.3	1.95
10.0 m			1.8	2.0	2.05	1.75
11.0 m			1.45	1.65	1.85	1.55
12.0 m			1.35 (11.4 m)	1.4	1.55	1.4
13.0 m				1.2	1.3	1.25
14.0 m				1.0	1.15	1.15
15.0 m				0.89	1.0	1.05
16.0 m					0.86	0.93
17.0 m					0.73	0.82
18.0 m					0.63	0.71
19.0 m					0.56 (18.7 m)	0.62
20.0 m						0.54
22.0 m						0.39
22.3 m						0.37
A (°)	0–82					

The values in parentheses are for the GR-130N model. A: boom angle range (with no load)

[BOOM] Unit: (t)

OUTRIGGER MIDDLE EXTENSION (4.3 m) - Over side -						
Boom length / Load radius	5.3 m	9.0 m	12.7 m	16.4 m	20.1 m	23.8 m
1.0 m	13.0 (4.9)	6.0 (4.9)				
1.5 m	13.0 (4.9)	6.0 (4.9)	6.0 (4.9)			
2.0 m	12.0 (4.9)	6.0 (4.9)	6.0 (4.9)	5.0 (4.9)		
2.5 m	10.0 (4.9)	6.0 (4.9)	6.0 (4.9)	5.0 (4.9)	4.7	
3.0 m	8.2 (4.9)	6.0 (4.9)	6.0 (4.9)	5.0 (4.9)	4.7	
3.5 m	7.0 (4.9)	6.0 (4.9)	6.0 (4.9)	5.0 (4.9)	4.7	3.2
4.0 m	6.1 (4.9)	6.0 (4.9)	6.0 (4.9)	5.0 (4.9)	4.7	3.2
4.5 m		5.45 (4.9)	5.4 (4.9)	5.0 (4.9)	4.5	3.2
5.0 m		4.8	4.75	4.6	4.05	3.2
5.5 m		4.25	4.25	4.2	3.7	3.2
6.0 m		3.85	3.8	3.8	3.4	3.0
7.0 m		3.15	3.1	3.2	2.9	2.6
8.0 m		2.7 (7.7 m)	2.5	2.65	2.5	2.25
9.0 m			1.95	2.15	2.2	1.95
10.0 m			1.55	1.75	1.8	1.75
11.0 m			1.3	1.4	1.5	1.55
12.0 m			1.15 (11.4 m)	1.15	1.25	1.35
13.0 m				0.95	1.05	1.15
14.0 m				0.8	0.9	1.0
15.0 m				0.65	0.75	0.85
16.0 m					0.65	0.75
17.0 m					0.55	0.63
18.0 m					0.45	0.53
19.0 m					0.4 (18.7 m)	0.44
20.0 m						0.38
A (°)	0–82					3–82

The values in parentheses are for the GR-130N model. A: boom angle range (with no load)

[BOOM] Unit: (t)

OUTRIGGER MIDDLE EXTENSION (3.5 m) - Over side -						
Boom length / Load radius	5.3 m	9.0 m	12.7 m	16.4 m	20.1 m	23.8 m
1.0 m	12.0 (4.9)	6.0 (4.9)				
1.5 m	12.0 (4.9)	6.0 (4.9)	6.0 (4.9)			
2.0 m	12.0 (4.9)	6.0 (4.9)	6.0 (4.9)	5.0 (4.9)		
2.5 m	10.0 (4.9)	6.0 (4.9)	6.0 (4.9)	5.0 (4.9)	4.7	
3.0 m	8.2 (4.9)	6.0 (4.9)	6.0 (4.9)	5.0 (4.9)	4.7	
3.5 m	7.0 (4.9)	6.0 (4.9)	6.0 (4.9)	5.0 (4.9)	4.7	3.2
4.0 m	6.1 (4.9)	6.0 (4.9)	6.0 (4.9)	5.0 (4.9)	4.7	3.2
4.5 m		5.1 (4.9)	5.1 (4.9)	5.0 (4.9)	4.5	3.2
5.0 m		4.2	4.2	4.4	4.05	3.2
5.5 m		3.5	3.5	3.9	3.7	3.2
6.0 m		3.0	2.95	3.3	3.4	3.0
7.0 m		2.25	2.2	2.45	2.6	2.5
8.0 m		1.85 (7.7 m)	1.65	1.9	2.0	2.05
9.0 m			1.25	1.5	1.6	1.65
10.0 m			0.95	1.15	1.25	1.35
11.0 m			0.7	0.92	1.0	1.1
12.0 m			0.6 (11.4 m)	0.72	0.82	0.9
13.0 m				0.55	0.66	0.75
14.0 m				0.4	0.51	0.6
15.0 m				0.3	0.4	0.5
16.0 m					0.3	0.4
17.0 m						0.3
A (°)	0–82				28–82	39–82

The values in parentheses are for the GR-130N model. A: boom angle range (with no load)

[BOOM] Unit: (t)

OUTRIGGER MIDDLE EXTENSION (2.5 m) - Over side -						
Boom length / Load radius	5.3 m	9.0 m	12.7 m	16.4 m	20.1m	23.8 m
1.0 m	12.0 (4.9)	6.0 (4.9)				
1.5 m	12.0 (4.9)	6.0 (4.9)	6.0 (4.9)			
2.0 m	12.0 (4.9)	6.0 (4.9)	6.0 (4.9)	5.0 (4.9)		
2.5 m	8.2 (4.9)	6.0 (4.9)	6.0 (4.9)	5.0 (4.9)	4.7	
3.0 m	5.9 (4.9)	5.7 (4.9)	5.8 (4.9)	5.0 (4.9)	4.7	
3.5 m	4.45	4.5	4.5	4.6	4.5	3.2
4.0 m	3.65	3.55	3.5	3.7	3.8	3.2
4.5 m		2.8	2.8	3.05	3.2	3.0
5.0 m		2.3	2.3	2.55	2.7	2.7
5.5 m		1.9	1.9	2.1	2.3	2.3
6.0 m		1.6	1.55	1.8	1.9	2.05
7.0 m		1.1	1.1	1.3	1.35	1.5
8.0 m		0.85 (7.7 m)	0.73	0.93	1.0	1.15
9.0 m			0.48	0.68	0.75	0.9
10.0 m			0.27	0.47	0.55	0.7
11.0 m				0.31	0.4	0.5
12.0 m					0.25	0.35
13.0 m						0.25
A (°)	0–82		22–82	39–82	48–82	53–82

The values in parentheses are for the GR-130N model. A: boom angle range (with no load)

[BOOM] Unit: (t)

OUTRIGGER MINIMUM EXTENSION (1.7-m X-type outrigger) (1.64-m H-type outrigger) - Over side -						
Boom length / Load radius	5.3 m	9.0 m	12.7 m	16.4 m	20.1 m	23.8 m
1.0 m	8.0 (4.9)	6.0 (4.9)				
1.5 m	7.0 (4.9)	6.0 (4.9)	6.0 (4.9)			
2.0 m	5.65(4.9)	5.4 (4.9)	5.5 (4.9)	5.0 (4.9)		
2.5 m	3.85	3.8	3.6	3.3	3.3	
3.0 m	2.85	2.85	2.7	2.7	2.7	
3.5 m	2.25	2.1	2.0	2.15	2.2	2.2
4.0 m	1.75	1.65	1.6	1.7	1.8	1.85
4.5 m		1.3	1.3	1.4	1.5	1.55
5.0 m		0.98	1.05	1.1	1.25	1.35
5.5 m		0.78	0.83	0.9	1.05	1.15
6.0 m		0.62	0.63	0.75	0.9	0.97
7.0 m		0.32	0.27	0.47	0.65	0.66
8.0 m						0.41
A (°)	0–82	29–82	53–82	59–82	62–82	67–82

The values in parentheses are for the GR-130N model. A: boom angle range (with no load)

[JIB] (23.8-m boom)

OUTRIGGER MAXIMUM EXTENSION (4.7 m)																- 360° -
Jib length	23.8-m boom + 3.6-m jib								23.8-m boom + 5.5-m jib							
Offset	5°		25°		45°		60°		5°		25°		45°		60°	
Boom angle	Load radius (m)	Rated lifting capacity (t)	Load radius (m)	Rated lifting capacity (t)	Load radius (m)	Rated lifting capacity (t)	Load radius (m)	Rated lifting capacity (t)	Load radius (m)	Rated lifting capacity (t)	Load radius (m)	Rated lifting capacity (t)	Load radius (m)	Rated lifting capacity (t)	Load radius (m)	Rated lifting capacity (t)
82°	4.1	1.6	5.4	1.4	6.3	1.0	6.6	0.65	4.5	1.0	6.5	1.0	7.8	0.65	8.4	0.4
80°	5.1	1.6	6.4	1.4	7.2	1.0	7.5	0.65	5.6	1.0	7.6	1.0	8.8	0.65	9.3	0.4
75°	7.6	1.55	8.7	1.2	9.4	0.93	9.6	0.65	8.3	1.0	10.1	0.85	11.1	0.63	11.5	0.4
70°	9.9	1.25	11.0	1.0	11.6	0.85	11.7	0.65	10.8	1.0	12.4	0.72	13.3	0.58	13.5	0.4
65°	12.1	1.05	13.1	0.9	13.6	0.77	13.6	0.65	13.1	0.81	14.6	0.61	15.4	0.52	15.5	0.4
60°	14.2	0.9	15.1	0.8	15.5	0.7	15.5	0.65	15.3	0.69	16.7	0.55	17.3	0.48	17.3	0.4
55°	16.1	0.72	16.9	0.66	17.3	0.65			17.4	0.58	18.6	0.5	19.1	0.45		
50°	17.9	0.6	18.6	0.58	18.9	0.56			19.3	0.53	20.4	0.44	20.7	0.41		
45°	19.5	0.45	20.1	0.42	20.3	0.44			21.0	0.4	21.9	0.38	22.1	0.39		
40°	21.0	0.33	21.5	0.32					22.5	0.27	23.3	0.28				
35°	22.3	0.25	22.7	0.24												
A (°)	34-82				44-82		59-82		39-82				44-82		59-82	

A: boom angle range (with no load)

[JIB] (23.8-m boom)

OUTRIGGER MIDDLE EXTENSION (4.3 m)																- Over side -
Jib length	23.8-m boom + 3.6-m jib								23.8-m boom + 5.5-m jib							
Offset	5°		25°		45°		60°		5°		25°		45°		60°	
Boom angle	Load radius (m)	Rated lifting capacity (t)	Load radius (m)	Rated lifting capacity (t)	Load radius (m)	Rated lifting capacity (t)	Load radius (m)	Rated lifting capacity (t)	Load radius (m)	Rated lifting capacity (t)	Load radius (m)	Rated lifting capacity (t)	Load radius (m)	Rated lifting capacity (t)	Load radius (m)	Rated lifting capacity (t)
82°	4.1	1.6	5.4	1.4	6.3	1.0	6.6	0.65	4.5	1.0	6.5	1.0	7.8	0.65	8.4	0.4
80°	5.1	1.6	6.4	1.4	7.2	1.0	7.5	0.65	5.6	1.0	7.6	1.0	8.8	0.65	9.3	0.4
75°	7.6	1.55	8.7	1.2	9.4	0.93	9.6	0.65	8.3	1.0	10.1	0.85	11.1	0.63	11.5	0.4
70°	9.9	1.25	11.0	1.0	11.6	0.85	11.7	0.65	10.8	1.0	12.4	0.72	13.3	0.58	13.5	0.4
65°	12.1	1.05	13.1	0.9	13.6	0.77	13.6	0.65	13.1	0.81	14.6	0.61	15.4	0.52	15.5	0.4
60°	14.2	0.85	15.1	0.8	15.5	0.7	15.5	0.65	15.3	0.69	16.7	0.55	17.3	0.48	17.3	0.4
55°	16.1	0.68	16.9	0.65	17.3	0.64			17.4	0.58	18.6	0.5	19.1	0.45		
50°	17.8	0.51	18.6	0.48	18.8	0.47			19.2	0.44	20.3	0.42	20.6	0.4		
45°	19.5	0.36	20.1	0.34	20.2	0.34			21.0	0.32	21.9	0.29	22.1	0.28		
40°	20.9	0.24	21.4	0.23												
A (°)	39-82				44-82		59-82		44-82						59-82	

A: boom angle range (with no load)

[JIB] (23.8-m boom)

OUTRIGGER MIDDLE EXTENSION (3.5 m)																- Over side -
Jib length	23.8-m boom + 3.6-m jib								23.8-m boom + 5.5-m jib							
Offset	5°		25°		45°		60°		5°		25°		45°		60°	
Boom angle	Load radius (m)	Rated lifting capacity (t)	Load radius (m)	Rated lifting capacity (t)	Load radius (m)	Rated lifting capacity (t)	Load radius (m)	Rated lifting capacity (t)	Load radius (m)	Rated lifting capacity (t)	Load radius (m)	Rated lifting capacity (t)	Load radius (m)	Rated lifting capacity (t)	Load radius (m)	Rated lifting capacity (t)
82°	4.1	1.6	5.4	1.4	6.3	1.0	6.6	0.65	4.5	1.0	6.5	1.0	7.8	0.65	8.4	0.4
80°	5.1	1.6	6.4	1.4	7.2	1.0	7.5	0.65	5.6	1.0	7.6	1.0	8.8	0.65	9.3	0.4
75°	7.6	1.55	8.7	1.2	9.4	0.93	9.6	0.65	8.3	1.0	10.1	0.85	11.1	0.63	11.5	0.4
70°	9.9	1.25	11.0	1.0	11.6	0.85	11.7	0.65	10.8	1.0	12.4	0.72	13.3	0.58	13.5	0.4
65°	12.0	0.87	13.0	0.8	13.6	0.77	13.6	0.65	13.1	0.75	14.6	0.61	15.4	0.52	15.5	0.4
60°	14.0	0.6	15.0	0.57	15.5	0.54	15.4	0.51	15.1	0.53	16.6	0.46	17.3	0.43	17.3	0.38
55°	15.9	0.38	16.8	0.35	17.1	0.34			17.1	0.34	18.4	0.31	19.0	0.28		
A (°)	54-82						59-82		54-82						59-82	

A: boom angle range (with no load)

[JIB] (23.8-m boom)

OUTRIGGER MIDDLE EXTENSION (2.5 m)																- Over side -
Jib length	23.8-m boom + 3.6-m jib								23.8-m boom + 5.5-m jib							
Offset	5°		25°		45°		60°		5°		25°		45°		60°	
Boom angle	Load radius (m)	Rated lifting capacity (t)	Load radius (m)	Rated lifting capacity (t)	Load radius (m)	Rated lifting capacity (t)	Load radius (m)	Rated lifting capacity (t)	Load radius (m)	Rated lifting capacity (t)	Load radius (m)	Rated lifting capacity (t)	Load radius (m)	Rated lifting capacity (t)	Load radius (m)	Rated lifting capacity (t)
82°	4.1	1.6	5.4	1.4	6.3	1.0	6.6	0.65	4.5	1.0	6.5	1.0	7.8	0.65	8.4	0.4
75°	7.5	1.15	8.6	0.98	9.4	0.8	9.6	0.65	8.3	1.0	10.0	0.8	11.1	0.63	11.5	0.4
70°	9.7	0.64	10.8	0.56	11.5	0.52	11.6	0.51	10.5	0.55	12.2	0.47	13.2	0.41	13.5	0.37
65°	11.8	0.31	12.8	0.27	13.4	0.25	13.4	0.25	12.7	0.25						
A (°)	64-82								64-82		69-82					

A: boom angle range (with no load)

[JIB] (20.1-m boom)

OUTRIGGER MAXIMUM EXTENSION (4.7 m)																- 360° -
Jib length	20.1-m boom + 3.6-m jib								20.1-m boom + 5.5-m jib							
Offset	5°		25°		45°		60°		5°		25°		45°		60°	
Boom angle	Load radius (m)	Rated lifting capacity (t)	Load radius (m)	Rated lifting capacity (t)	Load radius (m)	Rated lifting capacity (t)	Load radius (m)	Rated lifting capacity (t)	Load radius (m)	Rated lifting capacity (t)	Load radius (m)	Rated lifting capacity (t)	Load radius (m)	Rated lifting capacity (t)	Load radius (m)	Rated lifting capacity (t)
82°	3.5	1.6	4.7	1.4	5.6	1.0	6.0	0.65	3.9	1.0	5.8	1.0	7.1	0.65	7.8	0.4
80°	4.3	1.6	5.5	1.4	6.4	1.0	6.7	0.65	4.8	1.0	6.7	1.0	8.0	0.65	8.6	0.4
75°	6.4	1.6	7.5	1.3	8.3	0.95	8.5	0.65	7.1	1.0	8.8	0.88	9.9	0.63	10.4	0.4
70°	8.4	1.45	9.4	1.15	10.1	0.9	10.2	0.65	9.2	1.0	10.8	0.79	11.8	0.58	12.1	0.4
65°	10.3	1.25	11.2	1.05	11.8	0.86	11.8	0.65	11.3	0.96	12.8	0.72	13.6	0.55	13.7	0.4
60°	12.1	1.1	12.9	0.95	13.4	0.8	13.4	0.65	13.2	0.84	14.5	0.67	15.2	0.52	15.3	0.4
55°	13.7	0.92	14.5	0.81	14.9	0.75			15.0	0.73	16.2	0.62	16.8	0.49		
50°	15.3	0.8	16.0	0.73	16.2	0.67			16.7	0.66	17.8	0.56	18.1	0.45		
45°	16.7	0.62	17.3	0.58	17.5	0.54			18.2	0.51	19.2	0.48	19.4	0.4		
40°	18.0	0.46	18.5	0.45					19.6	0.38	20.3	0.36				
35°	19.1	0.36	19.5	0.33					20.8	0.29	21.4	0.28				
30°	20.1	0.28	20.4	0.27												
A (°)	29-82				44-82		59-82		34-82				44-82		59-82	

A: boom angle range (with no load)

[JIB] (20.1-m boom)

OUTRIGGER MIDDLE EXTENSION (4.3 m) - Over side -																
Jib length	20.1-m boom + 3.6-m jib								20.1-m boom + 5.5-m jib							
Offset	5°		25°		45°		60°		5°		25°		45°		60°	
Boom angle	Load radius (m)	Rated lifting capacity (t)	Load radius (m)	Rated lifting capacity (t)	Load radius (m)	Rated lifting capacity (t)	Load radius (m)	Rated lifting capacity (t)	Load radius (m)	Rated lifting capacity (t)	Load radius (m)	Rated lifting capacity (t)	Load radius (m)	Rated lifting capacity (t)	Load radius (m)	Rated lifting capacity (t)
82°	3.5	1.6	4.7	1.4	5.6	1.0	6.0	0.65	3.9	1.0	5.8	1.0	7.1	0.65	7.8	0.4
80°	4.3	1.6	5.5	1.4	6.4	1.0	6.7	0.65	4.8	1.0	6.7	1.0	8.0	0.65	8.6	0.4
75°	6.4	1.6	7.5	1.3	8.3	0.95	8.5	0.65	7.1	1.0	8.8	0.88	9.9	0.63	10.4	0.4
70°	8.4	1.45	9.4	1.15	10.1	0.9	10.2	0.65	9.2	1.0	10.8	0.79	11.8	0.58	12.1	0.4
65°	10.3	1.25	11.2	1.05	11.8	0.86	11.8	0.65	11.3	0.96	12.8	0.72	13.6	0.55	13.7	0.4
60°	12.0	1.05	12.9	0.95	13.4	0.8	13.4	0.65	13.2	0.84	14.5	0.67	15.2	0.52	15.3	0.4
55°	13.7	0.85	14.5	0.78	14.9	0.73			15.0	0.73	16.2	0.62	16.8	0.49		
50°	15.2	0.62	15.9	0.57	16.2	0.55			16.7	0.53	17.8	0.48	18.1	0.41		
45°	16.7	0.45	17.3	0.41	17.5	0.4			18.2	0.38	19.1	0.34	19.3	0.3		
40°	18.0	0.32	18.5	0.3					19.5	0.28	20.3	0.24				
35°	19.1	0.23	19.5	0.21												
A (°)	34-82				44-82		59-82		39-82				44-82		59-82	

A: boom angle range (with no load)

[JIB] (20.1-m boom)

OUTRIGGER MIDDLE EXTENSION (3.5 m) - Over side -																
Jib length	20.1-m boom + 3.6-m jib								20.1-m boom + 5.5-m jib							
Offset	5°		25°		45°		60°		5°		25°		45°		60°	
Boom angle	Load radius (m)	Rated lifting capacity (t)	Load radius (m)	Rated lifting capacity (t)	Load radius (m)	Rated lifting capacity (t)	Load radius (m)	Rated lifting capacity (t)	Load radius (m)	Rated lifting capacity (t)	Load radius (m)	Rated lifting capacity (t)	Load radius (m)	Rated lifting capacity (t)	Load radius (m)	Rated lifting capacity (t)
82°	3.5	1.6	4.7	1.4	5.6	1.0	6.0	0.65	3.9	1.0	5.8	1.0	7.1	0.65	7.8	0.4
80°	4.3	1.6	5.5	1.4	6.4	1.0	6.7	0.65	4.8	1.0	6.7	1.0	8.0	0.65	8.6	0.4
75°	6.4	1.6	7.5	1.3	8.3	0.95	8.5	0.65	7.1	1.0	8.8	0.88	9.9	0.63	10.4	0.4
70°	8.4	1.45	9.4	1.15	10.1	0.9	10.2	0.65	9.2	1.0	10.8	0.79	11.8	0.58	12.1	0.4
65°	10.2	1.05	11.2	0.95	11.8	0.84	11.8	0.65	11.3	0.9	12.8	0.72	13.6	0.55	13.7	0.4
60°	11.9	0.73	12.9	0.64	13.4	0.6	13.4	0.55	13.1	0.63	14.5	0.53	15.2	0.44	15.3	0.4
55°	13.6	0.47	14.4	0.42	14.8	0.39			14.9	0.39	16.1	0.35	16.7	0.28		
50°	15.2	0.29	15.9	0.26	16.2	0.25			16.5	0.24						
A (°)	49-82						59-82		49-82		54-82				59-82	

A: boom angle range (with no load)

[JIB] (20.1-m boom)

OUTRIGGER MIDDLE EXTENSION (2.5 m) - Over side -																
Jib length	20.1-m boom + 3.6-m jib								20.1-m boom + 5.5-m jib							
Offset	5°		25°		45°		60°		5°		25°		45°		60°	
Boom angle	Load radius (m)	Rated lifting capacity (t)	Load radius (m)	Rated lifting capacity (t)	Load radius (m)	Rated lifting capacity (t)	Load radius (m)	Rated lifting capacity (t)	Load radius (m)	Rated lifting capacity (t)	Load radius (m)	Rated lifting capacity (t)	Load radius (m)	Rated lifting capacity (t)	Load radius (m)	Rated lifting capacity (t)
82°	3.5	1.6	4.7	1.4	5.6	1.0	6.0	0.65	3.9	1.0	5.8	1.0	7.1	0.65	7.8	0.4
75°	6.3	1.15	7.5	0.98	8.3	0.8	8.5	0.65	7.1	1.0	8.8	0.8	9.9	0.63	10.4	0.4
70°	8.2	0.64	9.3	0.56	10.0	0.52	10.2	0.51	9.0	0.55	10.7	0.47	11.7	0.41	12.1	0.37
65°	10.1	0.31	11.1	0.27	11.7	0.25	11.8	0.25	11.0	0.25						
A (°)	64-82								64-82		69-82					

A: boom angle range (with no load)

❶ Points to remember when using the outriggers

1. The rated lifting capacities are shown for when the crane is set horizontally on firm ground, and include the weight of the slings and main winch hook (90 kg) when working with the boom, and the weight of the slings and auxiliary winch hook (25 kg) when working with the jib. The values above the bold line are based on the crane strength while those below are based on the crane stability factor.
2. The load radius is based on the actual figure including the boom deflection, so always use this as the standard when working with the boom.
3. The jib rated lifting capacity is different when the boom length is 20.1 m or less and when it exceeds 20.1 m.
4. Use the boom angle as the standard when working with the jib. The reference load radii shown are those when the jib is mounted to a 23.8-m and 20.1-m boom.
5. The rated lifting capacity for the single top is the value obtained by subtracting 65 kg from the boom rated lifting capacity, and includes the weight of the slings and auxiliary winch hook (25 kg), but must not exceed 1.8 t.
6. High-speed unwinding should only be used when only the hook is being lowered. Also, sudden lever operations should be avoided at this time.
7. The table below shows the hook wire rope standard number of parts of line for each boom length.
   However, when using other number of parts of line, the load per line should not exceed 1.8 t for either the main winch or auxiliary winch.

Boom length	5.3 m	9.0 m	12.7 m	16.4 m	20.1 m	23.8 m	Jib, single top
Number of parts of line	8 (4)	4	4	4	4	4	1
Hook type	Lifting 13 t (lifting 4.9 ton)						Lifting 1.8 t
Hook weight	90 kg (90 kg)						25 kg

The values in parentheses are for the GR-130N model.

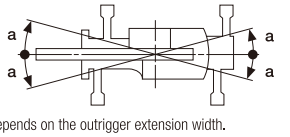

8. It should be 1 part of line for the hook wire rope on the jib.
9. The over-side lifting capability depends on the extension width of the outriggers. Perform work within the capability according to the extension width.
   The lifting capability for the front and rear areas is the rated lifting capacity of the "outrigger maximum extension", but the range (angle a) of the front and rear areas depends on the outrigger extension width.

Extension width	Middle extension (4.3 m)	Middle extension (3.5 m)	Middle extension (2.5 m)	Minimum extension (Note)
Angle a°	45	35	25	15

Note: 1.7 m ..... X-type outrigger
1.64 m .... H-type outrigger

❷ Not using outriggers

Unit: (t)

	When vehicle is stopped						When vehicle is traveling (1.6 km/h or slower)					
Boom length	5.3 m		9.0 m		12.7 m		5.3 m		9.0 m		12.7 m	
Load radius	Front	360°	Front	360°	Front	360°	Front	360°	Front	360°	Front	360°
1.0 m	3.6	2.8	3.6	2.8			3.2	2.0	3.2	2.0		
1.5 m	3.6	2.8	3.6	2.8	3.6	2.8	3.2	2.0	3.2	2.0	3.2	2.0
2.0 m	3.4	2.8	3.4	2.8	3.4	2.8	3.0	2.0	3.0	2.0	3.0	2.0
2.5 m	3.1	2.15	3.1	2.1	3.1	2.05	2.8	1.55	2.75	1.5	2.65	1.45
3.0 m	2.65	1.6	2.6	1.55	2.55	1.5	2.4	1.1	2.3	1.05	2.2	1.0
3.5 m	2.3	1.25	2.2	1.2	2.1	1.1	2.0	0.85	1.9	0.75	1.8	0.65
4.0 m	2.0	0.9	1.9	0.8	1.7	0.7	1.7	0.6	1.65	0.5	1.5	0.4
4.5 m			1.6	0.5	1.4	0.4			1.4	0.3	1.25	
5.0 m			1.3		1.1				1.15		1.0	
5.5 m			1.1		0.95				0.95		0.85	
6.0 m			0.9		0.8				0.8		0.7	
7.0 m			0.5		0.5				0.45		0.45	
A (°)	0-82		26-82	50-82	52-82	63-82	0-82		26-82	50-82	52-82	66-82

A: boom angle range (with no load)

❷ Points to remember when not using the outriggers

1. The rated lifting capacities are shown for when the crane is set horizontally on firm ground, the tires are at the standard pressure (900 kPa {9.00 kgf/cm²}), the crane suspension is totally locked, and include the weight of the slings and main winch hook (90 kg) when working with the boom. The values above the bold line are based on the crane strength while those below are based on the crane stability factor. When performing actual work, use after considering the ground and operating conditions, etc.
2. The load radius is based on the actual figure including the boom and tire deflection, so always use this as the standard.
3. The table below shows the hook wire rope standard number of parts of line for each boom length. However, when using other number of parts of line, the load per line should not exceed 1.8 t for either the main winch or auxiliary winch.

Boom length	5.3 m	9.0 m	12.7 m	Single top1
Number of parts of line	4	4	4	

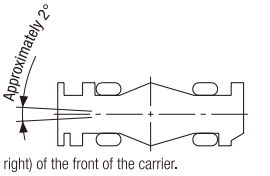

4. Do not perform high-speed unwinding with a boom longer than 12.7 m or a jib.
5. Only perform "front" crane operations while the AML "front position symbol" is lit. The front range is when the boom is within 2° (1° to either the left or right) of the front of the carrier.
6. The rated lifting capacity for the single top is the value obtained by subtracting 65 kg from the boom rated lifting capacity, and includes the weight of the slings and auxiliary winch hook (25 kg), but must not exceed 1.8 t.
7. Perform pick and carry with the "drive select" switch set to "L/4D" and the shift lever set to first gear.
8. Perform pick and carry with the slewing brake on, the load close to the ground so it will not swing, and at a speed of 1.6 km/h or lower. In particular, abrupt steering, starting or braking must be avoided.
9. Do not perform crane operations while performing pick and carry.

■ WORKING RANGE

Scale: 1/250

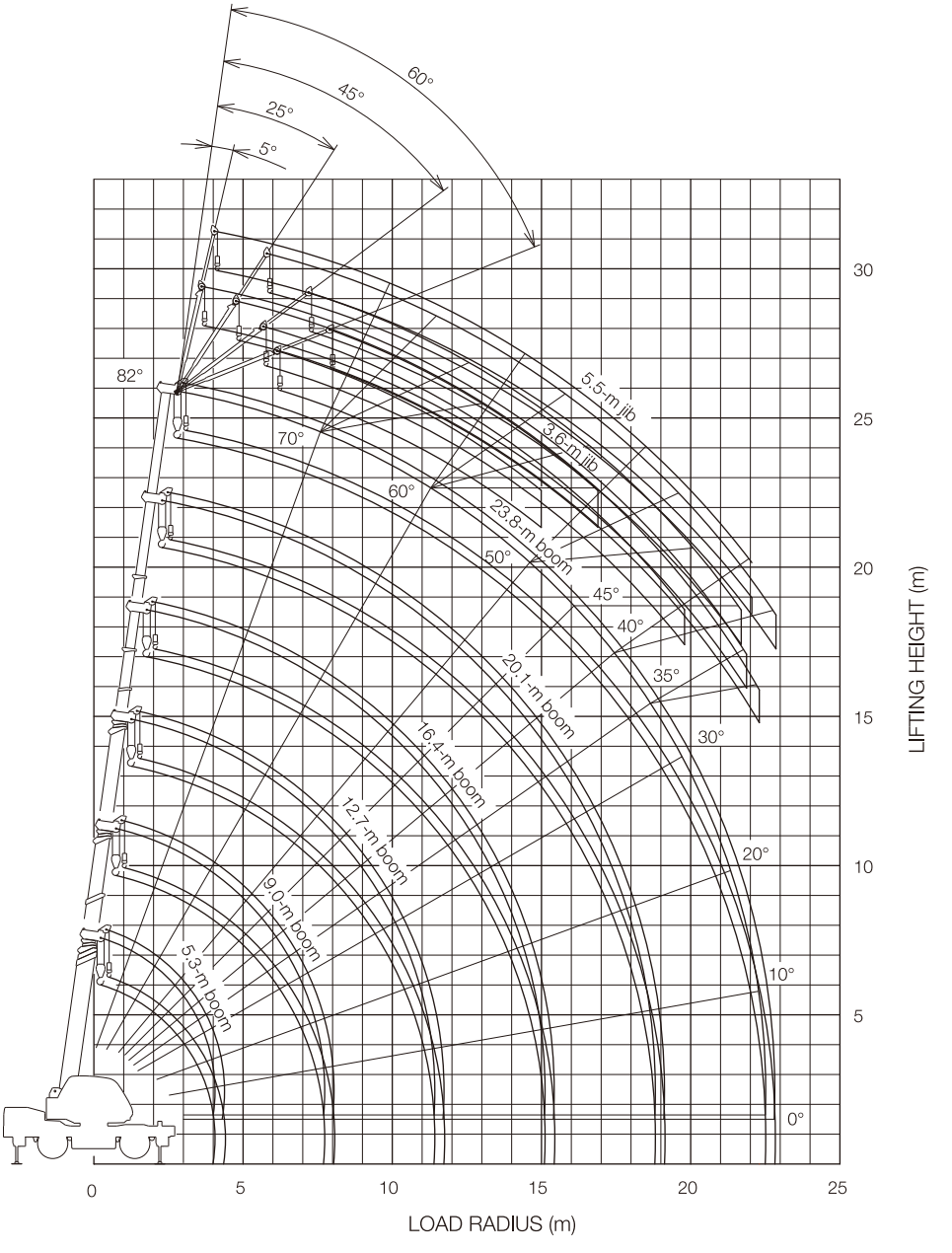

(Note) 1. The above drawing doesn't include the boom deflection.
2. The above drawing shows the outrigger maximum (4.7 m) extension.

DIMENSIONS

X-type outrigger

Scale: 1/100
(Unit: mm)

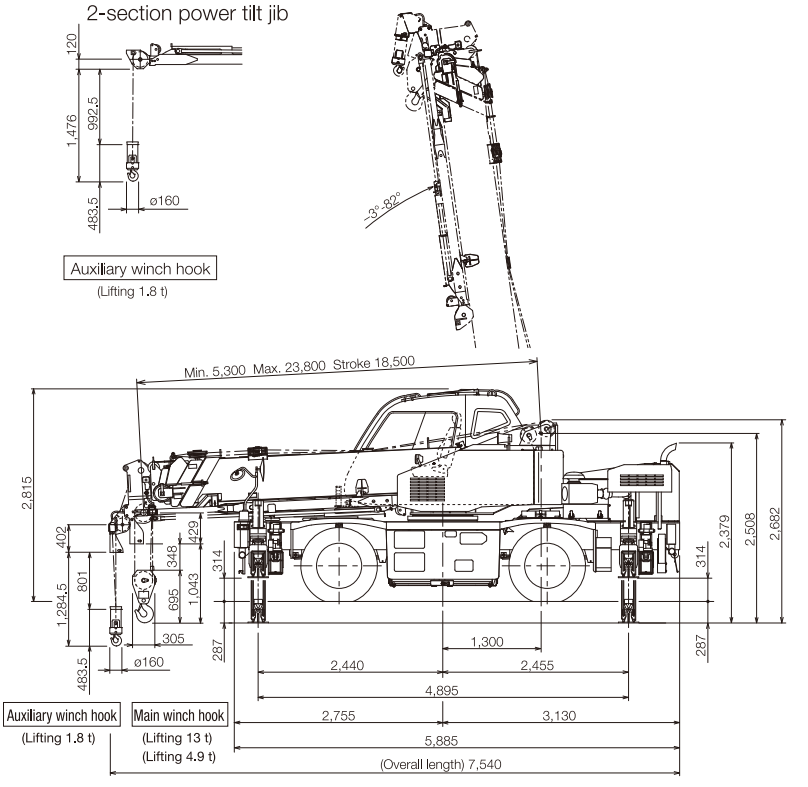

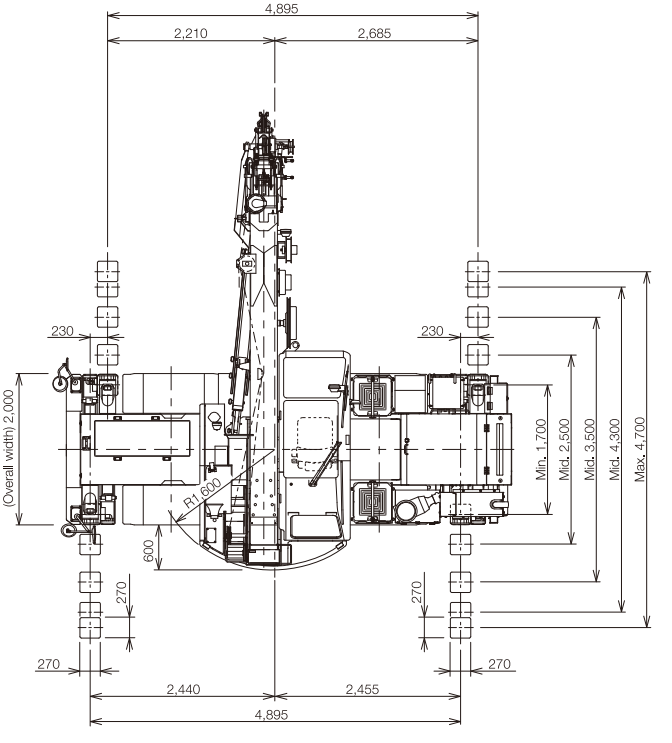

The following items in the drawing are options.
* Power retractable mirror
* AML external warning lamp
* Marker lamp
* Road shoulder lamp
* Toolbox

■ DIMENSIONS

H-type outrigger

Scale: 1/100
(Unit: mm)

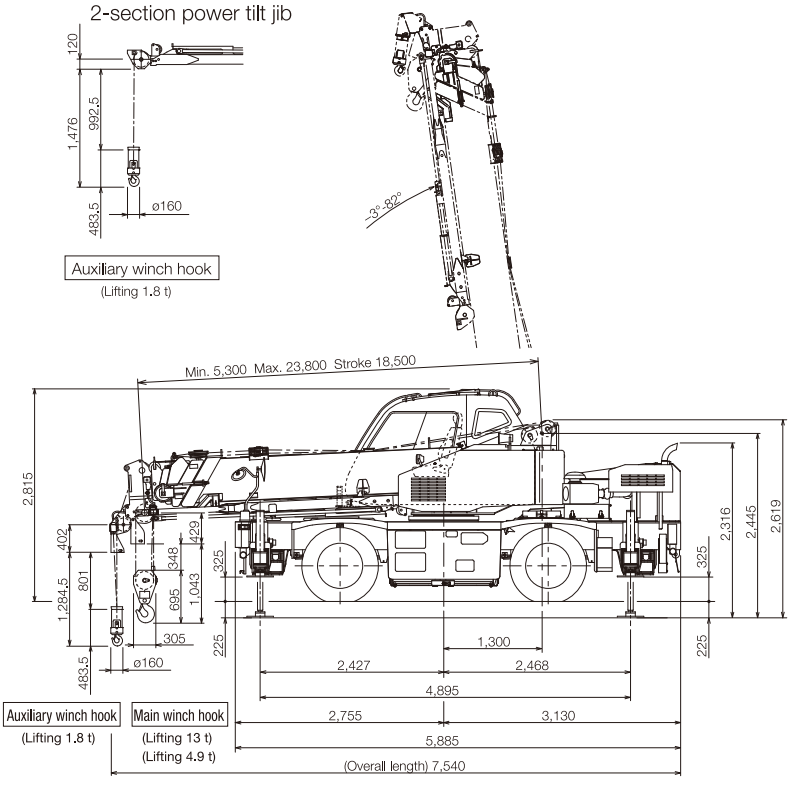

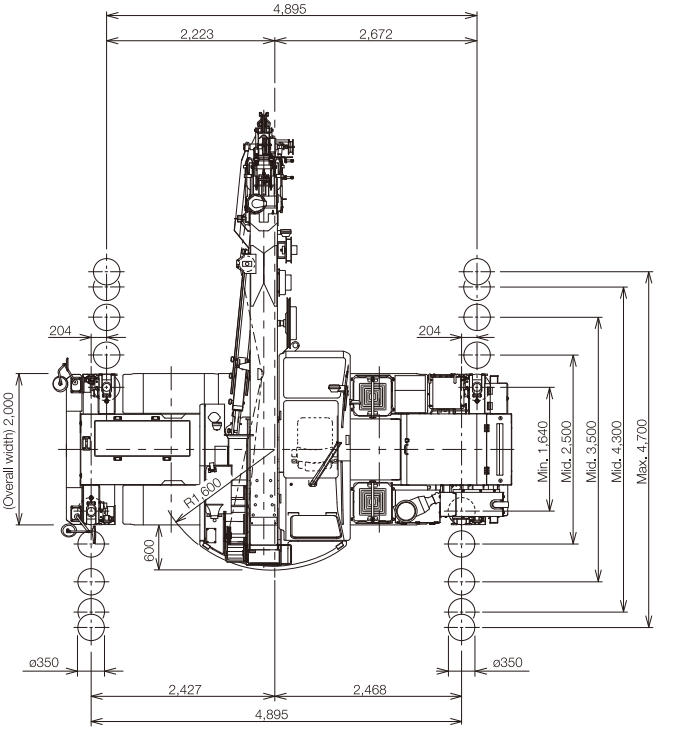

The following items in the drawing are options.
* Power retractable mirror
* AML external warning lamp
* Marker lamp
* Road shoulder lamp
* Toolbox

DIMENSIONS

X-type outrigger

Scale: 1/100
(Unit: mm)

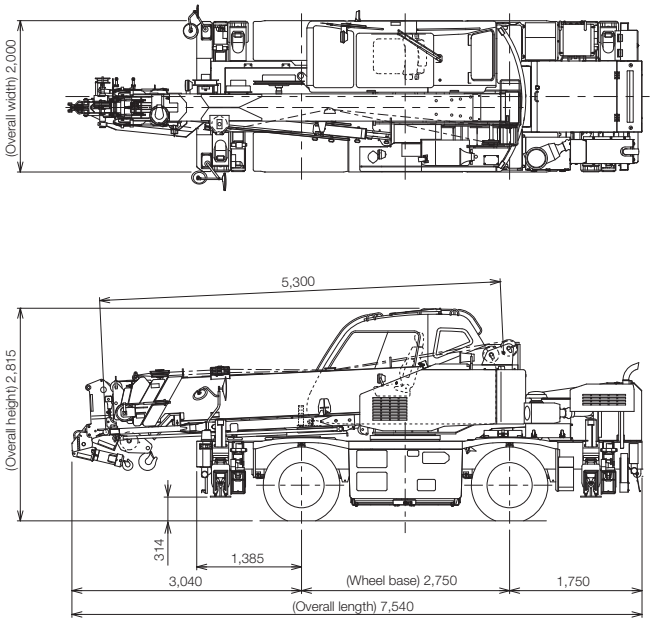

The power retractable mirror, AML external warning lamp, marker lamp, road shoulder lamp, and toolbox in this drawing are options.

H-type outrigger

Scale: 1/100
(Unit: mm)

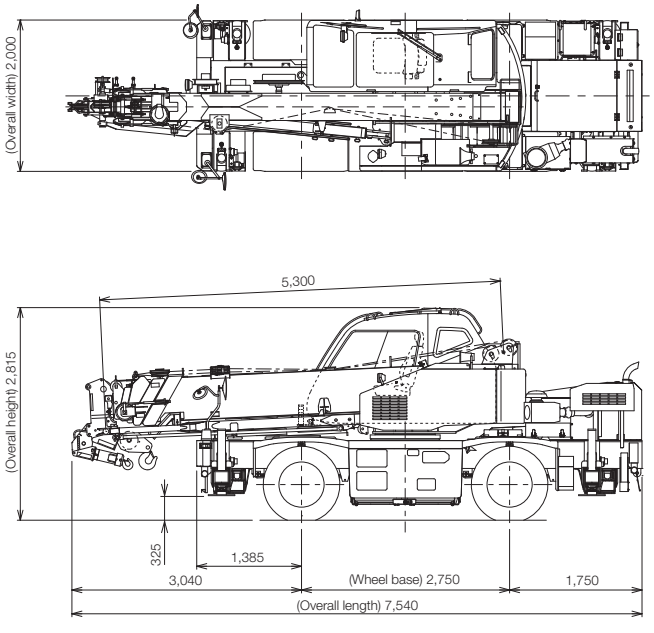

The power retractable mirror, AML external warning lamp, marker lamp, road shoulder lamp, and toolbox in this drawing are options.

MINIMUM RIGHT-ANGLE PASSAGE WIDTH

● While turning right in the front two-wheel steering mode

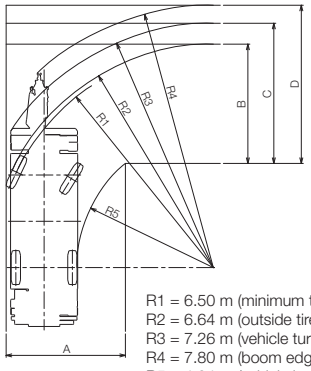

R1 = 6.50 m (minimum turning radius)
R2 = 6.64 m (outside tire edge turning radius)
R3 = 7.26 m (vehicle turning radius)
R4 = 7.80 m (boom edge turning radius)
R5 = 4.04 m (vehicle inside turning radius)
A = 3.56 m (entrance passage width)
B = 3.56 m (tire exit passage width)
C = 4.18 m (vehicle exit passage width)
D = 4.72 m (boom edge exit passage width)

● While turning right in the four-wheel steering mode

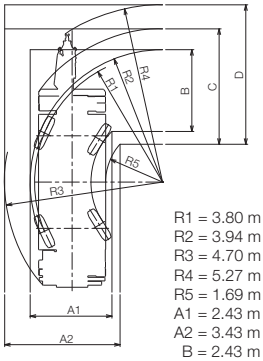

R1 = 3.80 m (minimum turning radius)
R2 = 3.94 m (outside tire edge turning radius)
R3 = 4.70 m (vehicle turning radius)
R4 = 5.27 m (boom edge turning radius)
R5 = 1.69 m (vehicle inside turning radius)
A1 = 2.43 m (tire entrance passage width)
A2 = 3.43 m (vehicle entrance passage width)
B = 2.43 m (tire exit passage width)
C = 3.43 m (vehicle exit passage width)
D = 4.15 m (boom edge exit passage width)

● While turning right in the rear two-wheel steering mode

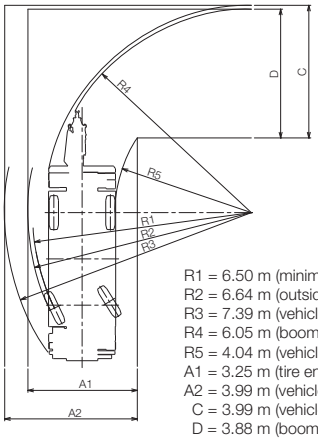

R1 = 6.50 m (minimum turning radius)
R2 = 6.64 m (outside tire edge turning radius)
R3 = 7.39 m (vehicle turning radius)
R4 = 6.05 m (boom edge turning radius)
R5 = 4.04 m (vehicle inside turning radius)
A1 = 3.25 m (tire entrance passage width)
A2 = 3.99 m (vehicle entrance passage width)
C = 3.99 m (vehicle exit passage width)
D = 3.88 m (boom edge exit passage width)

(Note) The above numbers are the calculated values.

Model name	Specifications	Specification no.
GR-130NL	Lifting 13 t, 6-section boom, 2-section power tilt jib, X-type outrigger	GR-130N-1-00101
GR-130NL	Lifting 13 t, 6-section boom, 2-section power tilt jib, H-type outrigger	GR-130N-1-00102
GR-130N	Lifting 4.9 t, 6-section boom, 2-section power tilt jib, X-type outrigger	GR-130N-1-00103
GR-130N	Lifting 4.9 t, 6-section boom, 2-section power tilt jib, H-type outrigger	GR-130N-1-00104

Note: Due to improvements, the delivered product may have specifications different from these.
201401

TADANO LTD.