Specifications

ALL-terrain crane working performance chart			
Category	Item	Unit	Parameters
Size parameters	Outline dimension under traveling state(length×width×height)	mm	20.8×3×4
	Outline dimension under preparedness state (length×width×height)	mm	26.5×3×4.5
	Total height	mm	4000
	Wheel base	mm	1500/2100/1500/1500/3120/1500/3300/1500
	Wheelspan	mm	2700
Mass parameters	Total operating mass (traveling state)	kg	108000
	Total operating mass (traveling state)	kg	12000
	Total operating mass (traveling state)	kg	12000
Power parameters	Rated engine power	kw/rpm	290/1800
	Engine rated torque	N.m/rpm	1850 / 1300
	Rated engine power	kw/rpm	480 / 1800
	Engine rated torque	N.m/rpm	2800 / 1300
	Emission standard	Euro III	
Traveling parameters	Maximum traveling speed	km/h	75
	Minimum turning radius	m	<13.1
	Minimum ground clearance	mm	354
	Approach angle	°	11
	Departure angle	°	16
	Braking distance (30km/h)	m	<10
	Maximum gradeability	%	43
	Oil consumed per 100km	L	147

SANY

SANY Overseas
Address: 319 Chuanda Road, Chuansha Economic Park, Pudong, Shanghai, China
Postcode: 201200
Website: http://www.sanygroup.com
Consultation Hotline: (+86)21-58592902
Email: sanyservice@sany.com.cn

Materials and specifications are subject to change without further notice in accordance with constant technical innovations.
Photos may include additional equipment.

Copyright @2010 SANY Group Co.,Ltd. All rights reserved.

Printed in China

SAC 12000 All-terrain crane

1200t Lifting Capacity

SANY

Features

- Advanced R&D strategies: full three-dimensional design, integrated FEM analysis, AMESIM system and ADAMS combination simulations;
- The overall machine adopts all-wheel steering and equipped with 5-mode oil-pneumatic suspension system and 6-mode steering system which contributes to outstanding travel ability;
- Self dismantling of main boom and counterweight, setup positioning mechanism ensure quick installation;
- Automatic adjusting level, electric-hydro servo steering, moment limiter, false diagnosis, simulation of loading condition guarantee safety and reliability;
- It has obtained 26 pieces of patents, 7 of which are invention patents;
- Max. rated lifting capacity: 12000 kn•t; max. lifting moment: 3400t.m. The basic boom length: 18.6m; full-extended boom length: 102m; powerful lifting capacity;
- It has multiple operation modes: 4 main booms, eight main booms, main boom extension, super lifting, towered boom, elevation boo,, fixed jib , counterweight combination and outrigger span combination and etc, which fulfill different demands;
- Main components adopts innovated structures, imported high-tensile steel reduced the weight of the overall machine;
- Hydraulic system adopts multi-pump multi-circuit variable system for good controlling;
- Hoisting and swinging adopt multi-pump and multi-circuit closed hydraulic system and lead to high-efficiency and energy-saving;
- Optimization power system, equipped with ZF TC-TRONIC fully automatic torque converter and imported eddy current retarder, improves crane's safety, economy and convenience;
- "Global customer portal", new remote monitoring system, allows remote fault diagnosis and remote requirement management.

Dimension

Traveling

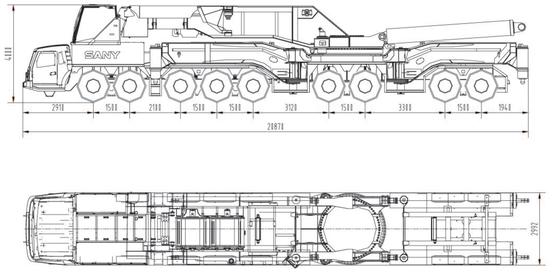

Four-section boom operation

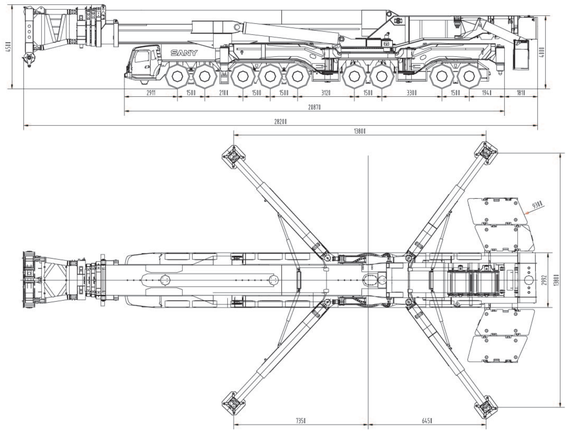

Eight-section boom operation

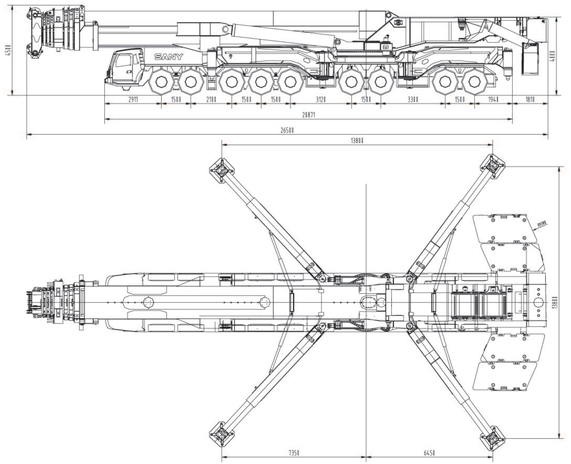

Specifications

All-terrain crane traveling performance chart				
Category	Item		Unit	Parameters
Main performance parameters	Maximum total rated lifting capacity		kN	12000
	Minimum rated amplitude		m	3
	Maximum lifting moment	Basic boom	kN.m	36000
		Longest boom	kN.m	3540
	Outtrigger span (transverse×longitudinal)		m	13.8×13.8
	Maximum lifting height of boom	Four arms	m	56
		Eight arms	m	102
	Fixed jib	Length	m	6.5 ～ 66.5m
		Installation angle	m	0°、20°、40°
		Power luffing angle scope	°	0 ～ 60°
		Maximum rated lifting capacity (at 6.5m)	t	160
	Tower jib	Length	m	18m ～ 126m
		Boom angle	°	83°、73°、66°
		Maximum rated lifitng capacity (18m)	t	200
Operating speed parameters	Boom lifting/dropping time		m/min	130
	Single rope speed of tower arm luffing		m/min	130
	Maximum slewing speed		s	880
	Time for the full extension/retraction of horizontal outtrigger		s	130
	Time for the full extension/retraction of vertical outtrigger		m/min	130
	Boom lifting/dropping time		r/min	0.8